BOLERO XL

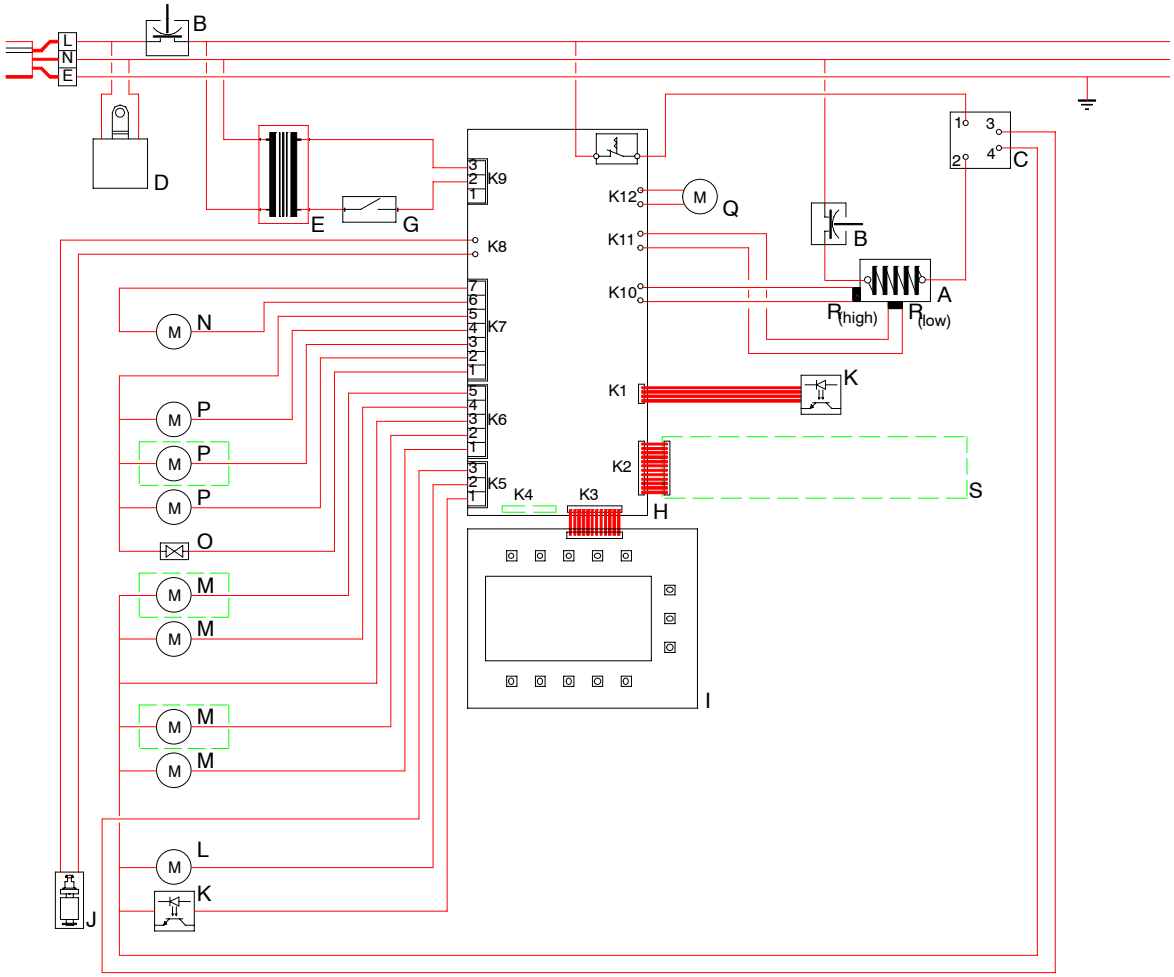

700.406.675D

A. Element
B. Temperature sensor
C. Relay
D. RC
E. Tranformator
G. Switch
H. Print
I. Keyboard
J. Level–switch
K. Light sensor
L. Motor pump
M. Doser Hopper
N. Motor water selector
O. Magnetic valve
P. Motor mixer
Q. Motor fan
R. NTC resister
S. Print light conductor
– – – Option

©Copyright Bravilor Bonamat B.V.